GEARED STEPPING MOTOR

SRM35 SERIES

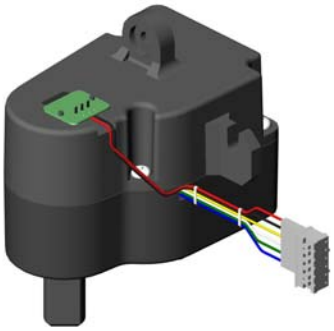

Application

Sanitary Equipment

MODEL	VOLTAGE		CURRENT	STEP ANGLE	NO OF PHASE	DRIVE MODE	MASS
	OPERATING RANGE	NOMINAL	A				
21SRP 3551001	22V~27V	24V	0.63/Phase	15°	2	BI-POLAR	206g

Specification 21SRP3551001

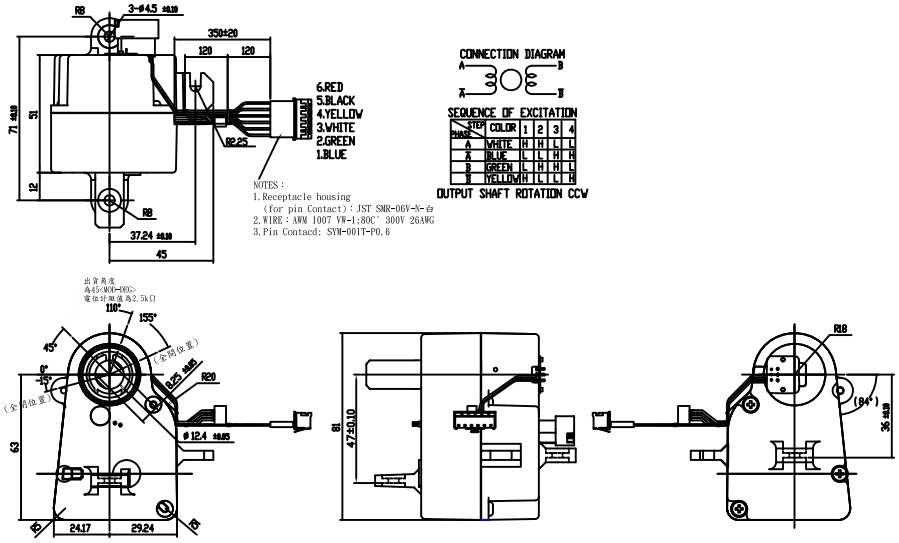
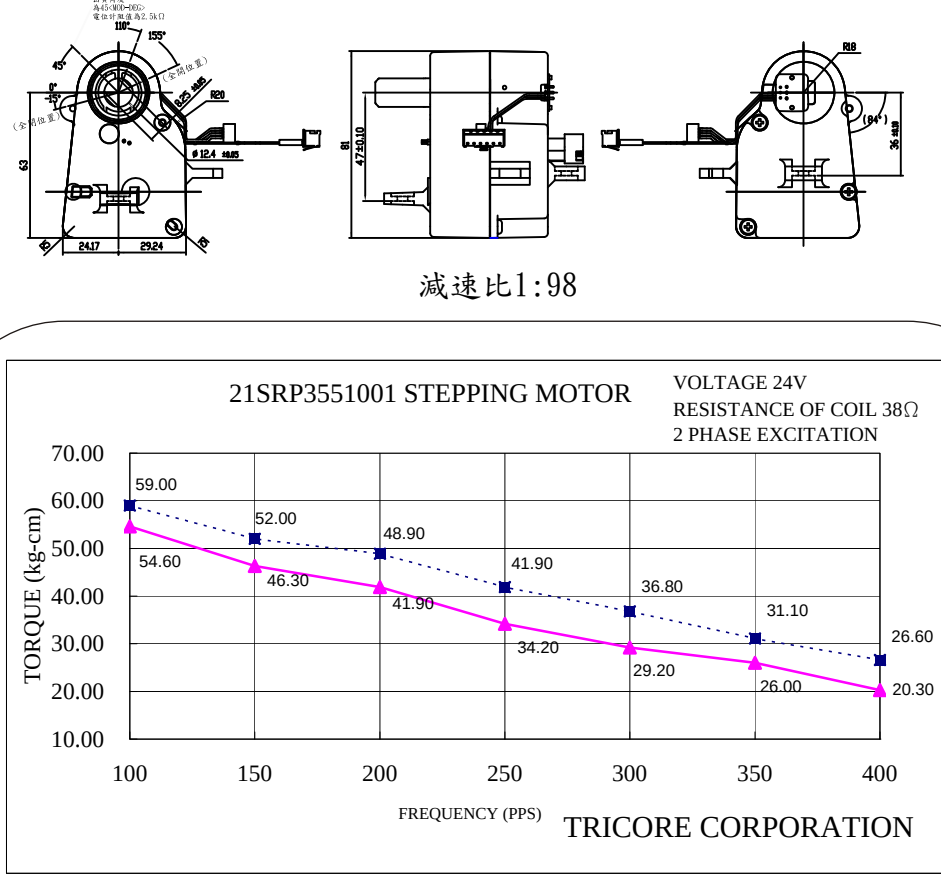
減速比1:98